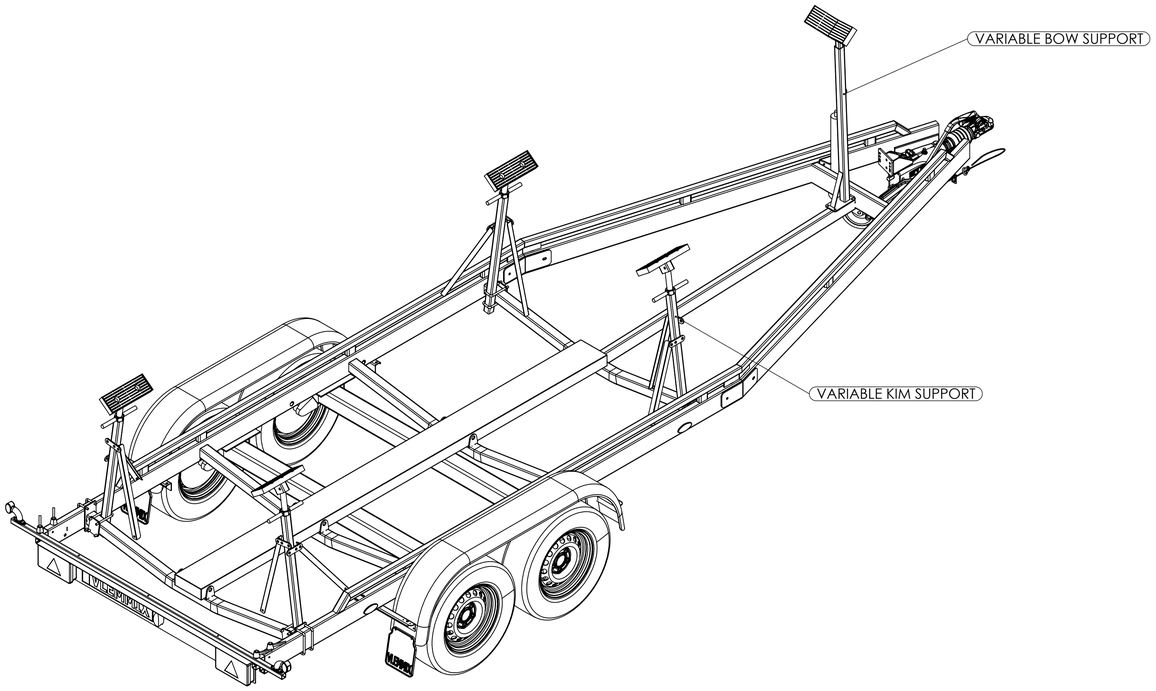

PROFILE IN CM	
VARIABLE KIM SUPPORT MIN - (MAX)	VARIABLE BOW SUPPORT MIN - (MAX)
40 - (70)	42 - (72)
60 - (90)	70 - (120)
80 - (110)	70 - (120)
100 - (130)	110 - (180)
120 - (150)	110 - (180)
150 - (180)	150 - (270)

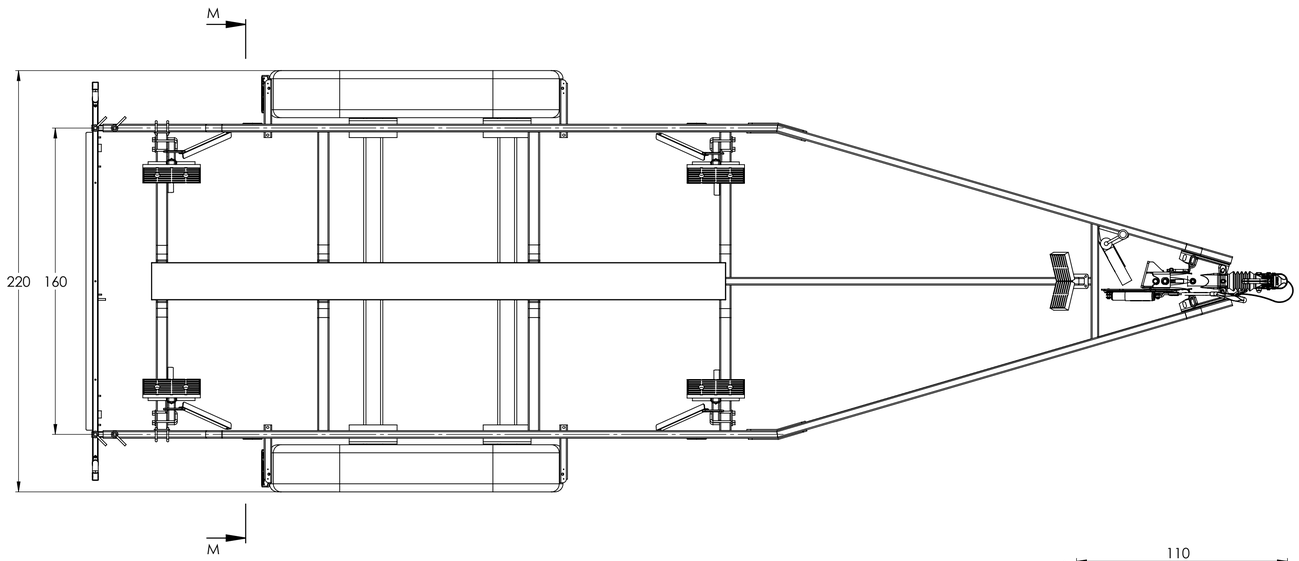

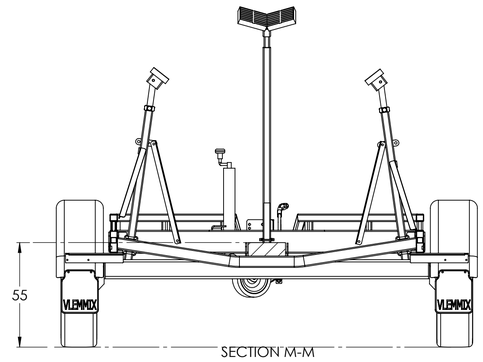

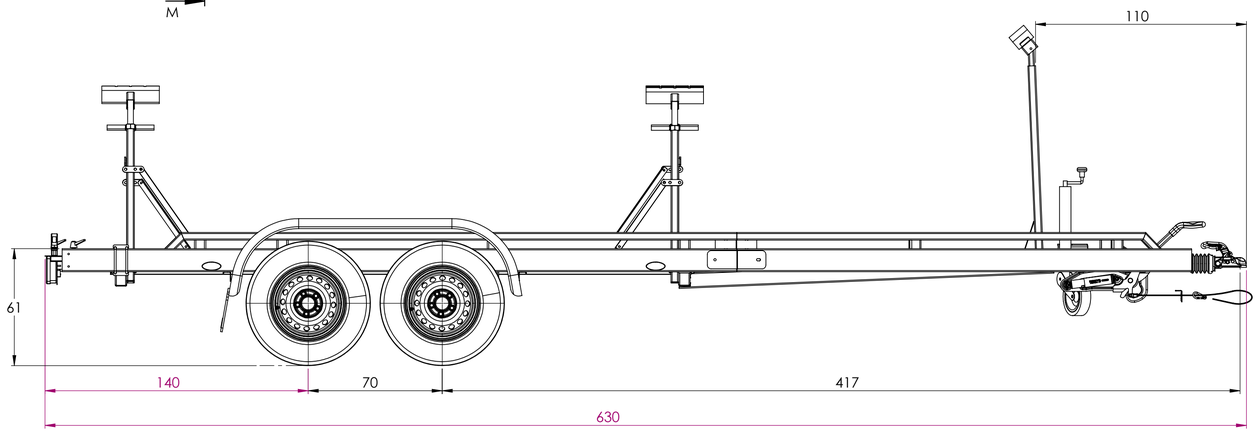

SAILBOAT TRAILER630 MR

2x 1350/1500/1800 kg

©Vlemmix Trailers.
All rights reserved. This drawing and its contents may not be made accessible and/or duplicated for others without permission.

VLEMMIX TRAILERS

TOLERANCE: ISO 2768-MK	DRAWN BY: BV DATE: 6-5-2026		
PROJECTION:	DESCRIPTION:		
UNIT: mm SCALE: 1:16	DRAWING NO.: BT-6.3-MR	REVISION: -	SIZE: A1 SHEET: 8/10