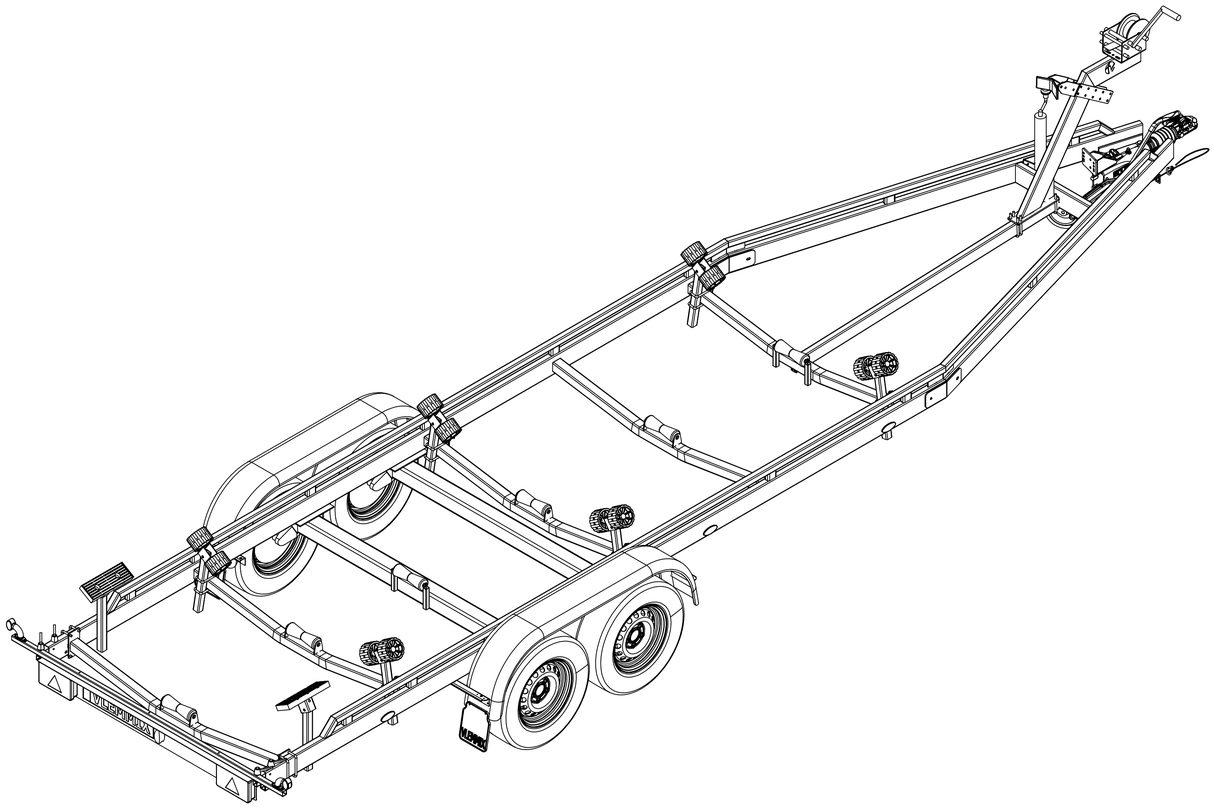

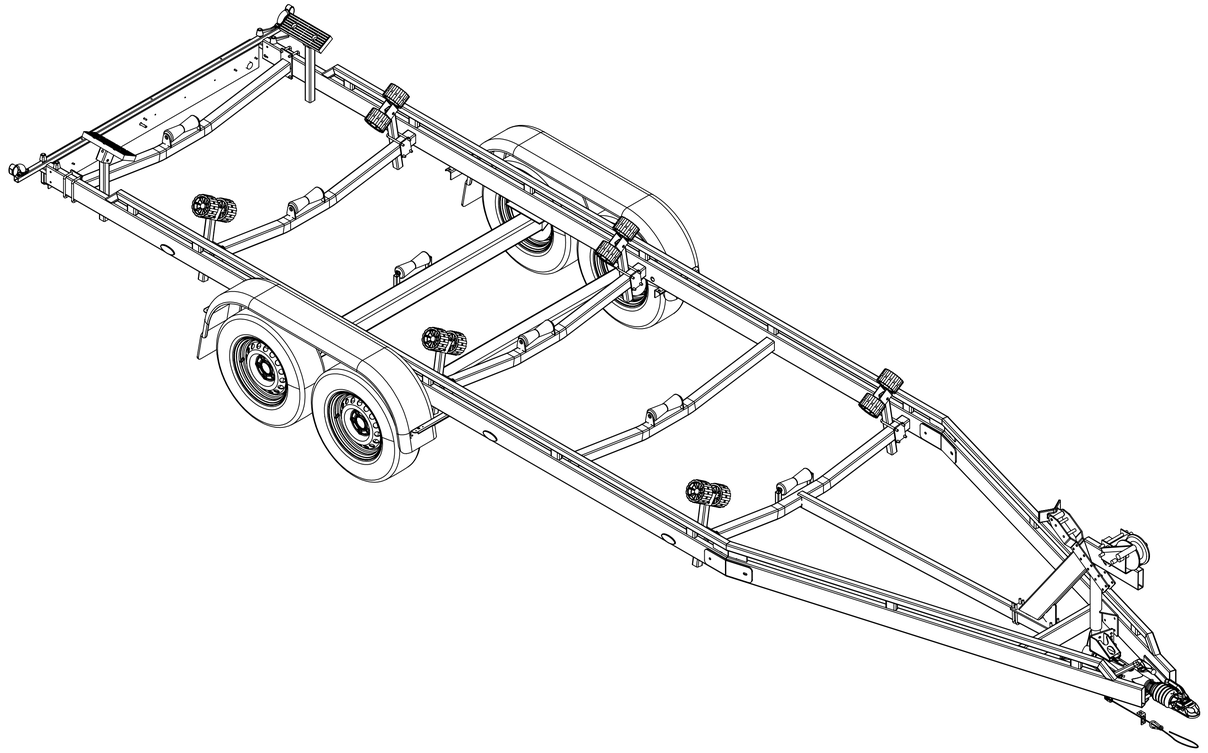

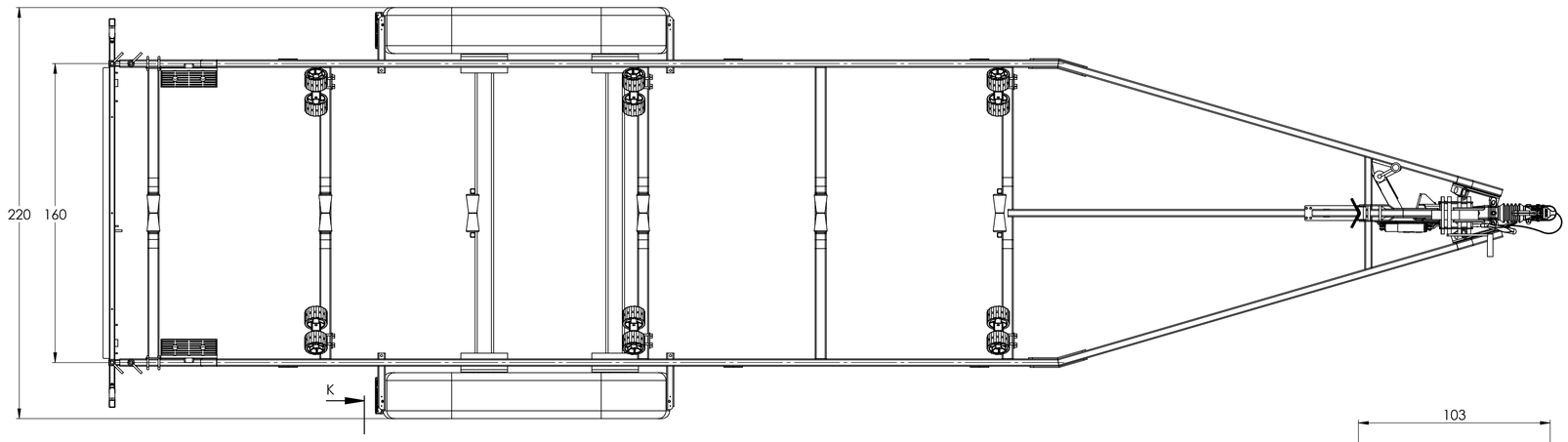

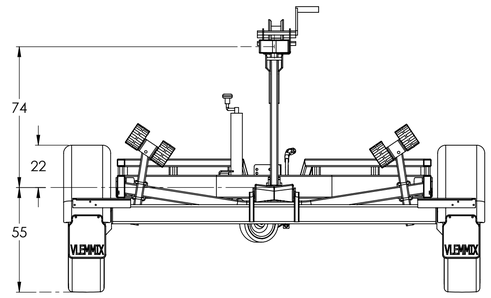

SECTION K-K

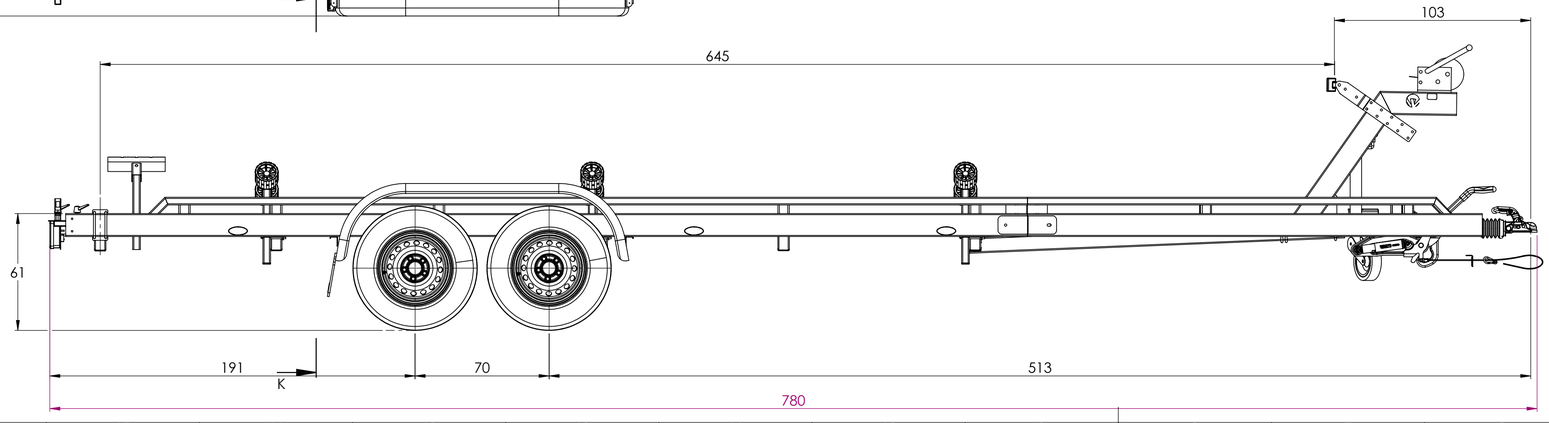

BOAT TRAILER 780

2x AS 1350/1500/1800 kg

©Vlemmix Trailers.
All rights reserved. This drawing and its contents may not be made accessible and/or duplicated for others without permission.

TOLERANCE: ISO 2768-MK	DRAWN BY: BV		
	DATE: 11-11-2026		
PROJECTION:	DESCRIPTION:		
UNIT: mm	DRAWING NO.: BT-7.8	REVISION: -	SIZE: A1
SCALE: 1:16			SHEET: 6/10

VLEMMIX TRAILERS